INSIDE BOW LIFTING D-RING – **C415LG** OR **C415WH**

ACHILLES LOGOS
ACHILLES "A" LOGO – **C493**
ACHILLES WAVE LOGO – **C492**

BOW HANDLE – **C423LG** OR **C423WH**

SEAT PARTS
ALUMINUM SEAT – **AST260**
SEAT CHANNEL PATCH – **DC412LG** OR **DC412WH**
SEAT PLASTIC CHANNELS – **EA003**

TOWING D-RINGS
35MM – **C414GY**

FABRIC HANDLES – **C426PORT** **C426STBD**

TEAR DROP RUBSTRAKE
GRAY / WHITE – **VDF090WH**

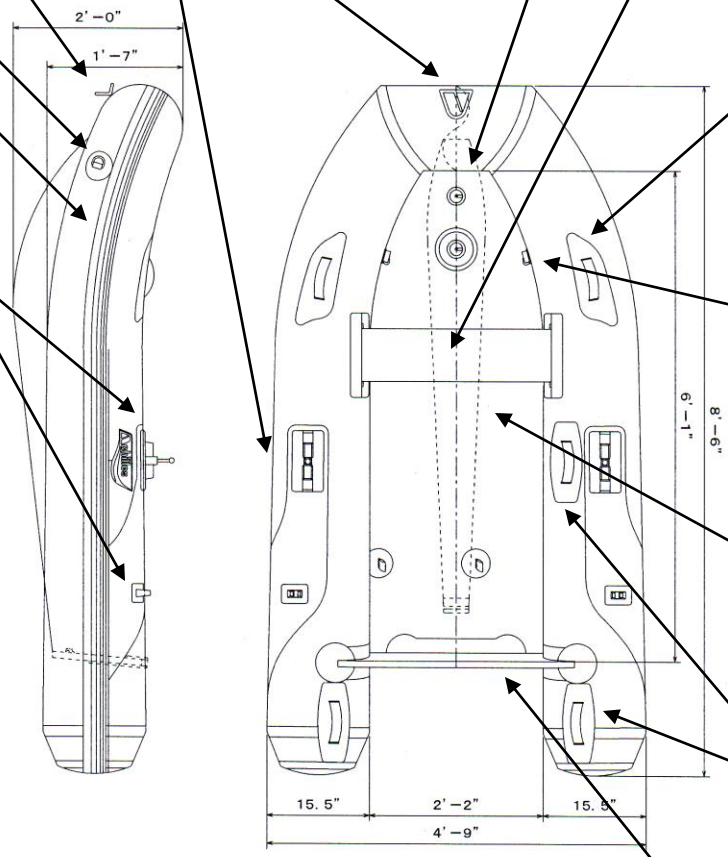

AIR VALVE PARTS
COMPLETE – **C342GY**
VALVE CAP – **C349GY**
CAP DIAPHRAM – **C348**
VALVE FLAPPER – **C3421**
VALVE STRAP – **C343N**
O-RING – **C344**
VALVE BASE – **C333**
BASE RING – **C345GY**

OARS & OARLOCK PARTS
OARS – **DC632**
OARLOCK – **DC4124GY**
SCREW CAPS – **DC393**
PIN & RIVET SET – **COM165**
OAR HOLDER – **DC4123GY**

FLOOR & KEEL PARTS
AIR FLOOR – **FQL260E**
AIR KEEL – **K260E**
FLOOR VALVE BASE – **C333A**
GAS TANK PAD – **GASTP**
TANK TIE DOWN – **TBD**

HANDLES
FABRIC HANDLE – **C431LG**

OTHER PARTS
REPAIR KIT – **C210LG** OR **C210WH**
FOOT PUMP BRAVO 9 – **BR9**
IN-LINE PRESSURE GUAGE - **E136**
CARRY BAG – **SJ824**
(**OPTIONAL**)
DIAL PRESSURE GUAGE - **E135**
UNDER SEAT STOWAGE BAG W/POCKETS - **USSTBAG**

TRANSOM PARTS
INSIDE TRANSOM PLATE – **SC620**
OUTSIDE TRANSOM PLATE – **SC3104**

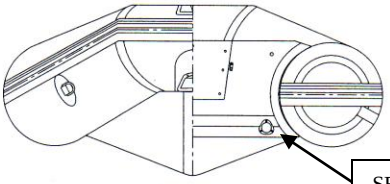

SELF-BAILER PARTS
BAILER VALVE (INCLUDES FLAPPER) – **C441A**
BAILER PLUG – **C441B**
BAILER FLAPPER – **C441C**

LSI-260E

2023

LINE DRAWING & PARTS LIST